SOLENOID-OPERATED CHECK VALVE (HK2)

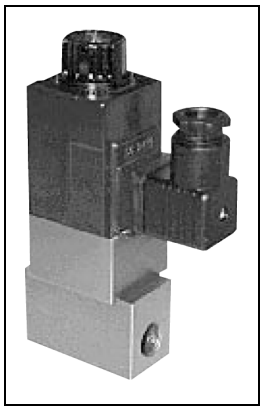

HK2-ST0-03B-A*

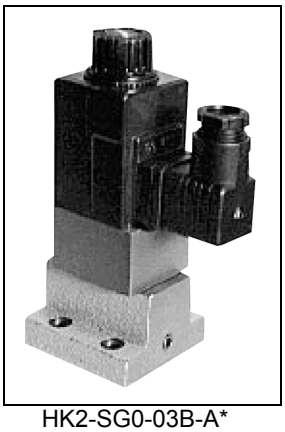

HK2-SG0-03B-A*

- Reverse flow from the OUT port to the IN port is possible.
- External oil leakage is minimized by the adoption of an oil-immersed solenoid valve.
- A DIN connector is adopted to facilitate wiring work.
- Water-proofing and corrosion resistance are improved.
- In the normal state this type of valve prevents the flow of pressurized fluid from a specified direction. However, it allows control of the direction of flow as needed by electric operation. This type of valve is mainly used for preventing a cylinder from falling under its own weight.

FEATURES

1. With the internal drain type, a back pressure of up to 14 MPa can be applied to the OUT port.
2. Reverse flow from the OUT port to the IN port is possible.
3. Continuous energization is possible with both AC and DC.

- The switching frequency must be within 1 time/sec.
- Maintain voltage range within ±10% of the rated voltage.
- Since the cracking pressure of the check valve is 0.3 MPa, the fluid pressure must always be higher than this value.
  (Fluid temperature: 20°C or higher, equivalent to ISO VG32)

- Internal Drain Type

MODEL DESIGNATION

HK 2 - S * 0 - ** B - **

- Solenoid-operated check valve
- Max. operating pressure
  2: 14 MPa
- Operating method
  S: Solenoid
- Piping method
  T: Thread-connection type
  G: Gasket-connection type
- Cracking pressure
- Nominal size
- Design number
- Voltage indication
  A1: 100 VAC, A2: 200 VAC,
  A3: 110 VAC, A4: 220 VAC
  D1: 12 VDC, D2: 24 VDC

SPECIFICATIONS

Nominal Size	Rated Flow (L/min)	Max. Operating Pressure (MPa)	Permissible Back Pressure at OUT Port (MPa)	Model	
				Internal Drain Type	
				Thread-connection Type	Gasket-connection Type
02	20	14	14	HK2-ST0-02B-**	
03	30			HK2-ST0-03B-**	
					HK2-SG0-03B-**

SOLENOID CHARACTERISTICS

- AC

Model	W-22B-18-A1			W-22B-18-A2			W-22B-18-A3			W-22B-18-A4		
Rated Voltage (VAC)	100 (50Hz)	100 (60Hz)	110 (60Hz)	200 (50Hz)	200 (60Hz)	220 (60Hz)	110 (50Hz)	110 (60Hz)	120 (60Hz)	220 (50Hz)	220 (60Hz)	240 (60Hz)
Starting current (A)	2.35	2.10	2.30	1.18	1.05	1.14	2.14	1.91	2.11	1.07	0.95	1.05
Holding current (A)	0.47	0.37	0.42	0.24	0.19	0.22	0.43	0.34	0.39	0.21	0.21	0.19
Power consumption (W)	21.8	18.8	23.5	21.9	18.9	23.6	21.8	18.8	23.5	21.9	21.9	23.6

- DC

Model	WD-22B-42-D1	WD-22B-42-D2
Rated Voltage (VDC)	12	24
Holding current (A)	2.08	1.04
Power consumption (W)	25	

● HK2-STO-02B-A*

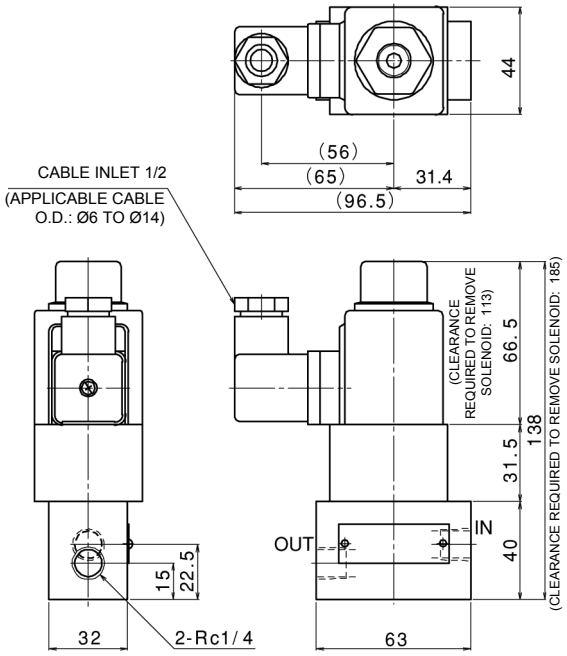

MASS: 1.5 kg

● HK2-STO-02B-D*

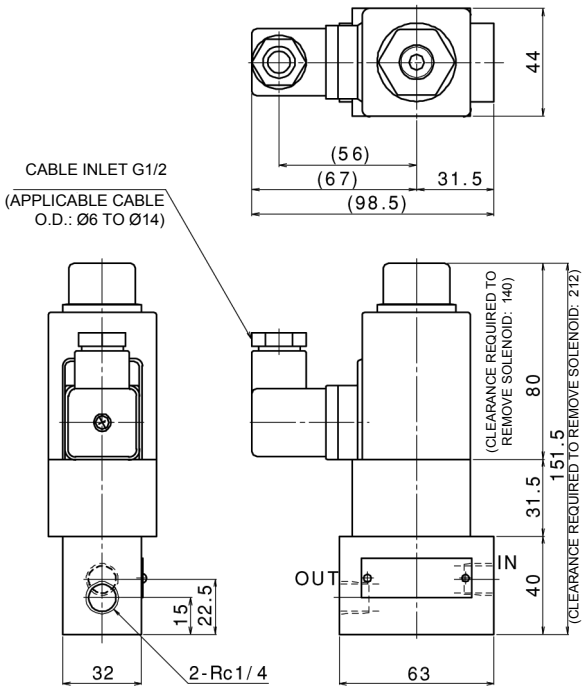

MASS: 1.5 kg

● HK2-STO-03B-A*

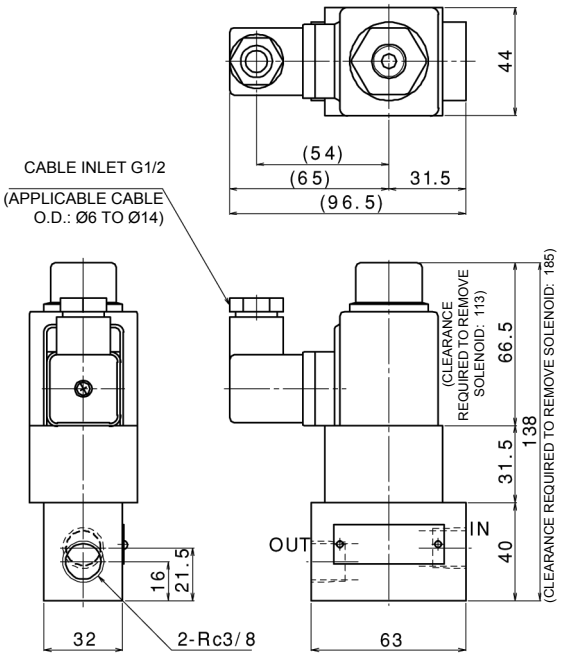

MASS: 1.5 kg

● HK2-STO-03B-D*

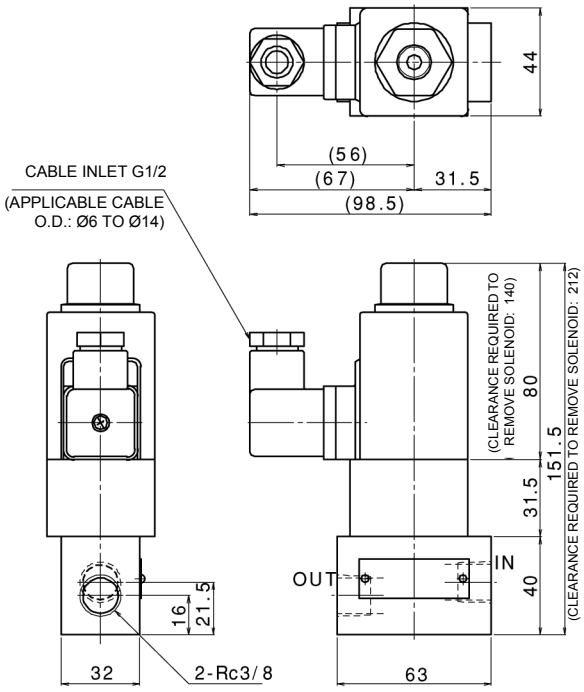

MASS: 1.5 kg

● HK2-SGO-03B-A*

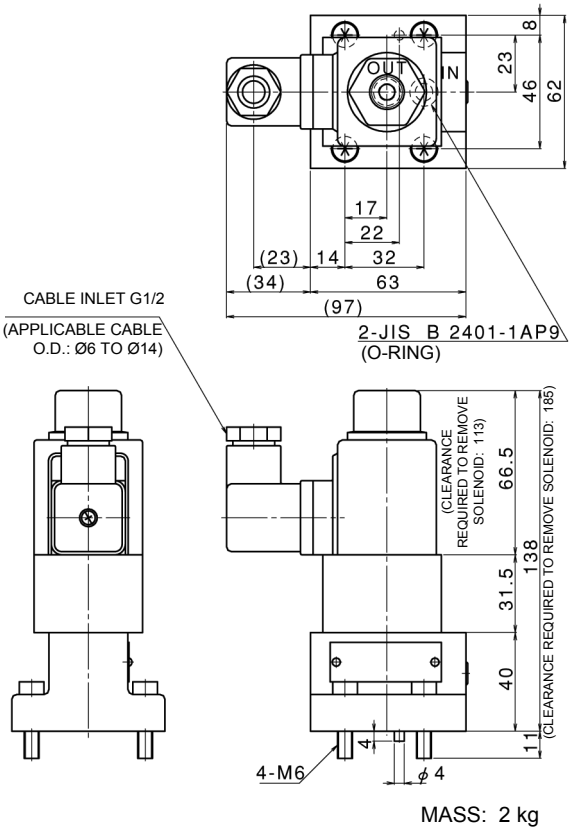

MASS: 2 kg

● HK2-SGO-03B-D*

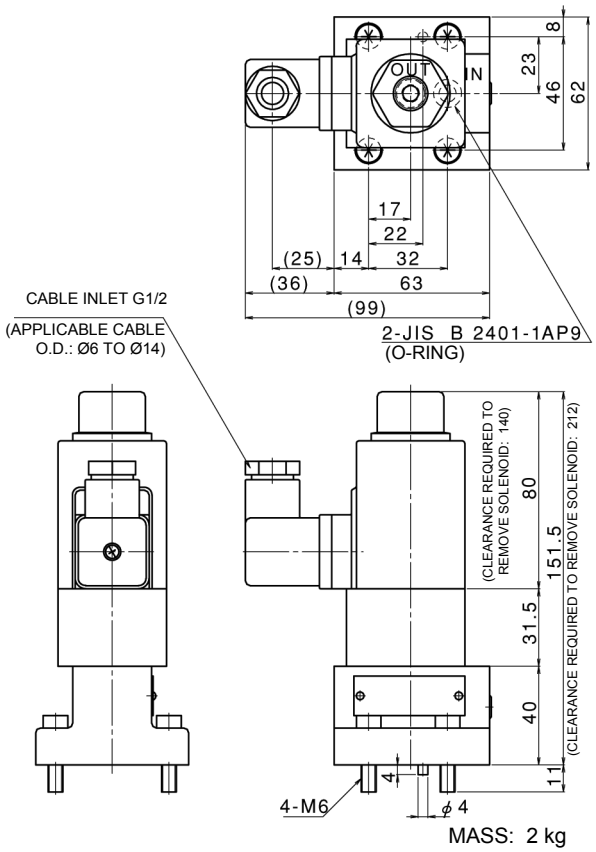

MASS: 2 kg
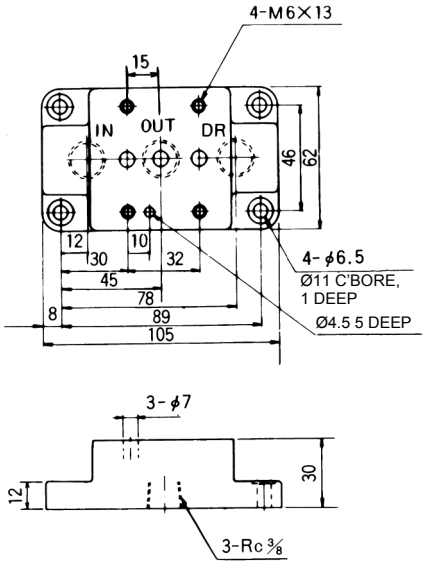
● SHK03-S-03T1